PASTERNACK®
THE ENGINEER'S RF SOURCE

BNC Male to BNC Male Plenum Cable Using 75 Ohm RG59-P Coax, RoHS

TECHNICAL DATA SHEET PE3123

Configuration

Connector 1	BNC Male
Connector 2	BNC Male
Cable Type	RG59-P
Impedance	50 Ohms
Velocity of Propagation	82 %

Mechanical Specifications

Cable Assembly

Size

Diameter	0.57 in [14.48 mm]
Weight	0.056 lbs [25.4 g]
Cable Color	White

Cable

Cable Type	RG59-P
Inner Conductor Type	Stranded
Cable Inner Conductor	Copper
No of Shields	1
Dielectric Type	FEP (F)
Jacket Material	PVC
Jacket Diameter	0.194 in [4.93 mm]

Connector 1

Type	BNC Male
Configuration	Straight
Inner Conductor Material and Plating	Brass, Gold
Inner Conductor Plating Specification	30µ in. minimum
Coupling Nut Material and Plating	Brass, Nickel
Coupling Nut Plating Specification	100µ in. minimum
Body Material and Plating	Brass, Nickel
Body Plating Specification	100µ in. minimum
Dielectric Type	Teflon

Connector 2

Type	BNC Male
Configuration	Straight
Inner Conductor Material and Plating	Brass, Gold
Inner Conductor Plating Specification	30µ in. minimum
Coupling Nut Material and Plating	Brass, Nickel
Coupling Nut Plating Specification	100µ in. minimum
Body Material and Plating	Brass, Nickel
Body Plating Specification	100µ in. minimum
Dielectric Type	Teflon

Click the following link (or enter part number in "SEARCH" on website) to obtain additional part information including price, inventory and certifications: BNC Male to BNC Male Plenum Cable Using 75 Ohm RG59-P Coax, RoHS PE3123

Pasternack Enterprises, Inc. • P.O. Box 16759, Irvine, CA 92623
Phone: (866) 727-8376 or (949) 261-1920 • **Fax:** (949) 261-7451
Sales@Pasternack.com • Techsupport@Pasternack.com

© 2014 Pasternack Enterprises All Rights Reserved

PASTERNACK®
THE ENGINEER'S RF SOURCE

BNC Male to BNC Male Plenum Cable Using 75 Ohm RG59-P Coax, RoHS

TECHNICAL DATA SHEET PE3123

Compliance Certifications (visit www.Pasternack.com for current document)

RoHS Compliant	Yes

Notes:

- Values at +25 °C, sea level

BNC Male to BNC Male Plenum Cable Using 75 Ohm RG59-P Coax, RoHS from Pasternack Enterprises has same day shipment for domestic and International orders. Our RF, microwave and millimeter wave products maintain a 99% availability and are part of the broadest selection in the industry.

Click the following link (or enter part number in "SEARCH" on website) to obtain additional part information including price, inventory and certifications: BNC Male to BNC Male Plenum Cable Using 75 Ohm RG59-P Coax, RoHS PE3123

URL: http://www.pasternack.com/bnc-male-bnc-male-rg59-p-cable-assembly-pe3123-p.aspx

The information contained in this document is accurate to the best of our knowledge and representative of the part described herein. It may be necessary to make modifications to the part and/or the documentation of the part, in order to implement improvements. Pasternack reserves the right to make such changes as required. Unless otherwise stated, all specifications are nominal. Pasternack does not make any representation or warranty regarding the suitability of the part described herein for any particular purpose, and Pasternack does not assume any liability arising out of the use of any part or documentation.

Pasternack Enterprises, Inc. • P.O. Box 16759, Irvine, CA 92623
Phone: (866) 727-8376 or (949) 261-1920 • **Fax:** (949) 261-7451
Sales@Pasternack.com • Techsupport@Pasternack.com

© 2014 Pasternack Enterprises All Rights Reserved

© 2014 Pasternack Enterprises All Rights Reserved

PE3123 CAD Drawing

BNC Male to BNC Male Plenum Cable Using 75 Ohm RG59-P Coax, RoHS

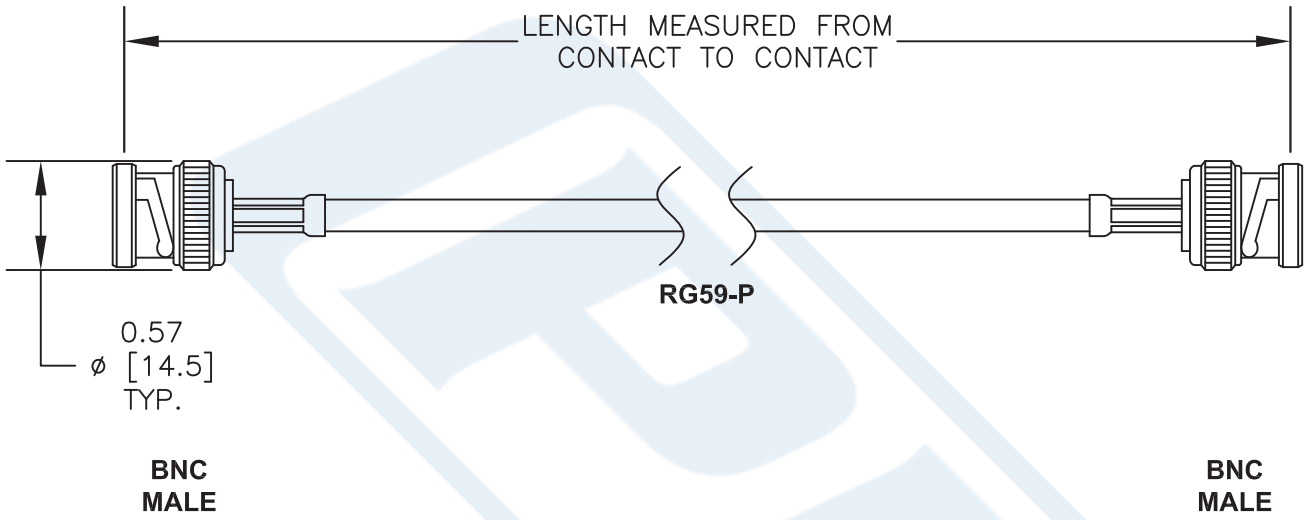

How To Order	Part # Ext.	Length In Inches	Part # Ext.	Length In Centimeters
Part Number Configuration PE3 zzz yy - xx uu zzz: 00 - 99999 yy: LF = RoHS Compliant, < Blank > = Standard xx: Length uu: CM = Centimeters, < Blank > = Inches Note: LF applies only to RF cables	-12	12"	-25CM	25Cm
Examples PE3000LF-100 PE3000-100 PE3000LF-100CM PE3000-100CM	-24	24"	-50CM	50Cm
	-36	36"	-75CM	75Cm
	-48	48"	-100CM	100Cm
	-60	60"	-125CM	125Cm
	-xx	Custom Length	-xxCM	Custom Length

PASTERNACK
THE ENGINEER'S RF SOURCE
Pasternack Enterprises, Inc.
P.O. Box 16759 | Irvine | CA | 92623
Phone: (949) 261-1920 | **Fax:** (949) 261-7451
Website: www.pasternack.com | **E-Mail:** sales@pasternack.com

DWG TITLE

PE3123

NOTES:
1. UNLESS OTHERWISE SPECIFIED ALL DIMENSIONS ARE NOMINAL.
2. ALL SPECIFICATIONS ARE SUBJECT TO CHANGE WITHOUT NOTICE AT ANY TIME.
3. DIMENSIONS ARE IN INCHES [mm].
4. LENGTH TOLERANCE IS ± 1.5% OR 3/8", WHICHEVER IS GREATER.

FSCM NO. 53919	CAD FILE 051414	SCALE N/A	SIZE A	2233