PASTERNACK®
www.pasternack.com

TNC Male Right Angle Connector Crimp/Solder Attachment For RG8X, PE-C240, 0.240 inch

TECHNICAL DATA SHEET PE44635

TNC Male Right Angle Connector Crimp/Solder Attachment For RG8X, PE-C240, 0.240 inch

Configuration

Connector	TNC Male
Connector Interface Type	RG8X,PE-C240,0.240 inch
Cable Attachment Method (Shield/Contact)	Crimp/Solder
Body Style	Right Angle

Electrical Specifications

Impedance, Ohms	50

Mechanical Specifications

Size

Length, in [mm]	1.103 [28.02]
Width/Dia., in [mm]	0.59 [15]
Height, in [mm]	1.06 [26.92]
Weight, lbs [g]	0.042 [19.05]

Connector

Type	TNC Male
Contact Material and Plating	Brass, Gold
Coupling Nut Material and Plating	Brass, Nickel
Body Material and Plating	Brass, Nickel
Dielectric Type	Teflon

Compliance Certifications (visit www.Pasternack.com for current document)

RoHS Compliant	Yes

Plotted and Other Data

Notes:	Values at 25 °C, sea level

URL: http://www.pasternack.com/tnc-male-standard-rg8x-pe-c240-0.240-connector-pe44635-p.aspx

TNC Male Right Angle Connector Crimp/Solder Attachment For RG8X, PE-C240, 0.240 inch from Pasternack Enterprises has same day shipment for domestic and International orders. We maintain 99% availability of the industry's broadest selection of RF, microwave and fiber optic products.

The information contained in this document is accurate to the best of our knowledge and representative of the part described herein. It may be necessary to make modifications to the part and/or the documentation of the part, in order to implement improvements. Pasternack reserves the right to make such changes as required. Unless otherwise stated, all specifications are nominal.

Pasternack Enterprises, Inc. • P.O. Box 16759, Irvine, CA 92623
Phone: (866) 727-8376 or (949) 261-1920 • **Fax:** (949) 261-7451
Sales@Pasternack.com • Techsupport@Pasternack.com

© 2013 Pasternack Enterprises All Rights Reserved

PE44635 CAD Drawing

TNC Male Right Angle Connector Crimp/Solder
Attachment For RG8X, PE-C240, 0.240 inch

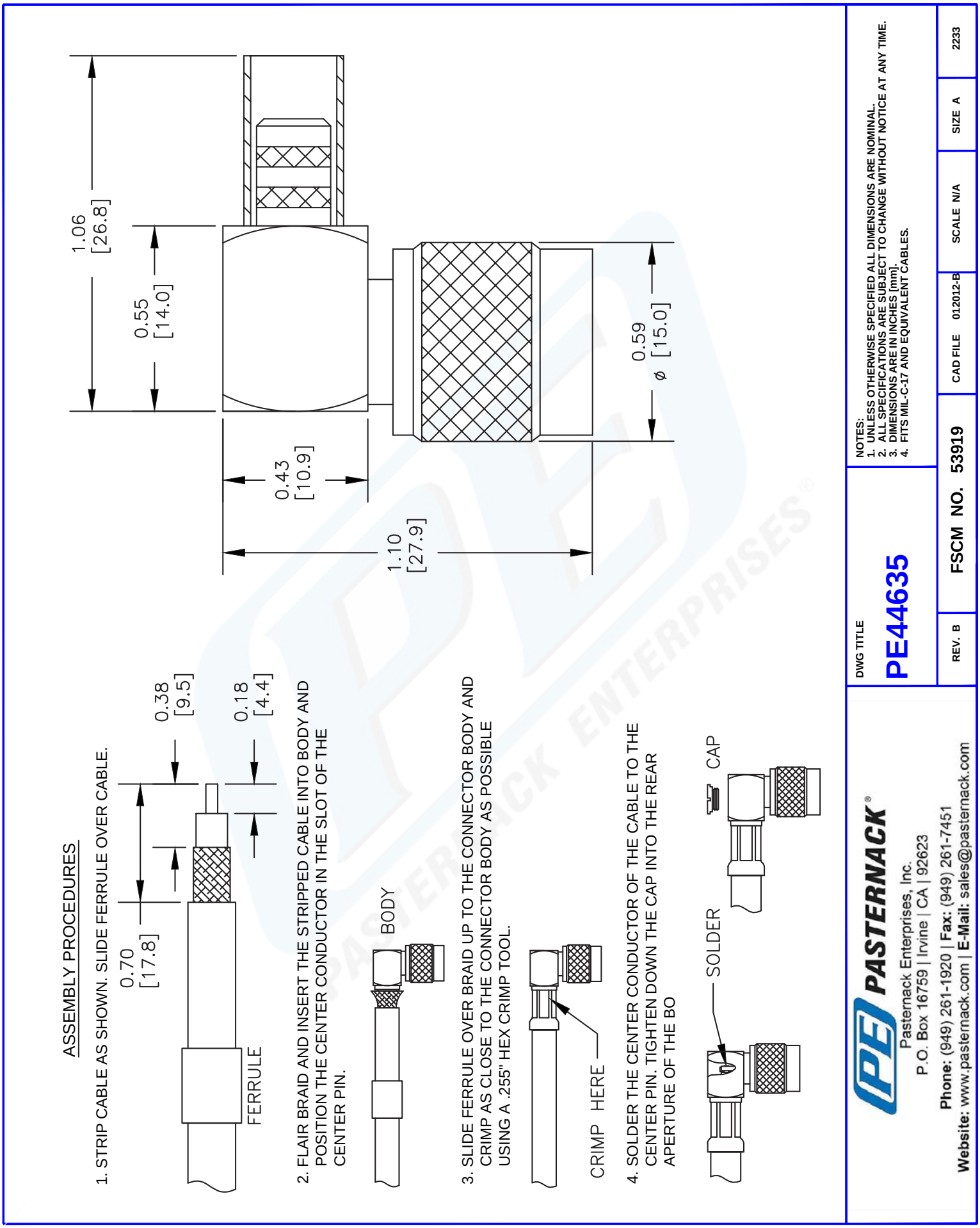

© 2012 Pasternack Enterprises All Rights Reserved

TNC Female Connector Crimp/Solder Attachment for PE-C240, RG8X, 0.240 inch, LMR-240, LMR-240-DB, LMR-240-UF, B7808A

RF Connectors Technical Data Sheet PE44636

Configuration

- TNC Female Connector
- 50 Ohms
- Straight Body Geometry
- PE-C240, RG8X, 0.240 inch, LMR-240, LMR-240-DB, LMR-240-UF, B7808A Interface Type
- Crimp/Solder Attachment

Features

- Max. Operating Frequency 11 GHz
- Gold Plated Phosphor Bronze Contact

Applications

- General Purpose Test
- Custom Cable Assemblies

Description

Pasternack's PE44636 TNC female connector with crimp/solder attachment for PE-C240, RG8X, 0.240 inch, LMR-240, LMR-240-DB, LMR-240-UF and B7808A is part of our full line of RF components available for same-day shipping. Our TNC female connector operates up to a maximum frequency of 11 GHz.

Our TNC female connector PE44636 datasheet specifications and drawing with dimensions are shown below in this PDF. Pasternack's broad catalog of RF, microwave and millimeter wave connectors allows designers to configure and customize their signal connections however they like. Whether the need is to provide an I/O for a board design, or simply create a custom cable assembly configuration, Pasternack has the right connector for the job. Pasternack can also expertly build your custom cable assemblies for you and ship same-day.

Electrical Specifications

Description	Minimum	Typical	Maximum	Units
Frequency Range	DC		11	GHz

Mechanical Specifications

Size	
Length	1.325 in [33.66 mm]
Width/Dia.	0.452 in [11.48 mm]
Weight	0.042 lbs [19.05 g]

Click the following link (or enter part number in "SEARCH" on website) to obtain additional part information including price, inventory and certifications: TNC Female Connector Crimp/Solder Attachment for PE-C240, RG8X, 0.240 inch, LMR-240, LMR-240-DB, LMR-240-UF, B7808A PE44636

Pasternack Enterprises, Inc. • P.O. Box 16759, Irvine, CA 92623
Phone: (866) 727-8376 or (949) 261-1920 • **Fax:** (949) 261-7451
Sales@Pasternack.com • Techsupport@Pasternack.com

© 2016 Pasternack Enterprises All Rights Reserved

TNC Female Connector Crimp/Solder Attachment for PE-C240, RG8X, 0.240 inch, LMR-240, LMR-240-DB, LMR-240-UF, B7808A

Material Specifications

Description	Material	Plating
Contact	Phosphor Bronze	Gold
Insulation	PTFE	
Body	Brass	Nickel

Environmental Specifications

Temperature

Operating Range -40 to +85 deg C

Compliance Certifications (see product page for current document)

Plotted and Other Data

Notes:

TNC Female Connector Crimp/Solder Attachment for PE-C240, RG8X, 0.240 inch, LMR-240, LMR-240-DB, LMR-240-UF, B7808A from Pasternack Enterprises has same day shipment for domestic and International orders. Our RF, microwave and millimeter wave products maintain a 99% availability and are part of the broadest selection in the industry.

Click the following link (or enter part number in "SEARCH" on website) to obtain additional part information including price, inventory and certifications: TNC Female Connector Crimp/Solder Attachment for PE-C240, RG8X, 0.240 inch, LMR-240, LMR-240-DB, LMR-240-UF, B7808A PE44636

URL: https://www.pasternack.com/tnc-female-standard-rg8x-pe-c240-0.240-connector-pe44636-p.aspx

The information contained in this document is accurate to the best of our knowledge and representative of the part described herein. It may be necessary to make modifications to the part and/or the documentation of the part, in order to implement improvements. Pasternack reserves the right to make such changes as required. Unless otherwise stated, all specifications are nominal. Pasternack does not make any representation or warranty regarding the suitability of the part described herein for any particular purpose, and Pasternack does not assume any liability arising out of the use of any part or documentation.

Pasternack Enterprises, Inc. • P.O. Box 16759, Irvine, CA 92623
Phone: (866) 727-8376 or (949) 261-1920 • **Fax:** (949) 261-7451
Sales@Pasternack.com • Techsupport@Pasternack.com

© 2016 Pasternack Enterprises All Rights Reserved

PE44636 CAD Drawing

TNC Female Connector Crimp/Solder Attachment for PE-C240, RG8X, 0.240 inch, LMR-240, LMR-240-DB, LMR-240-UF, B7808A

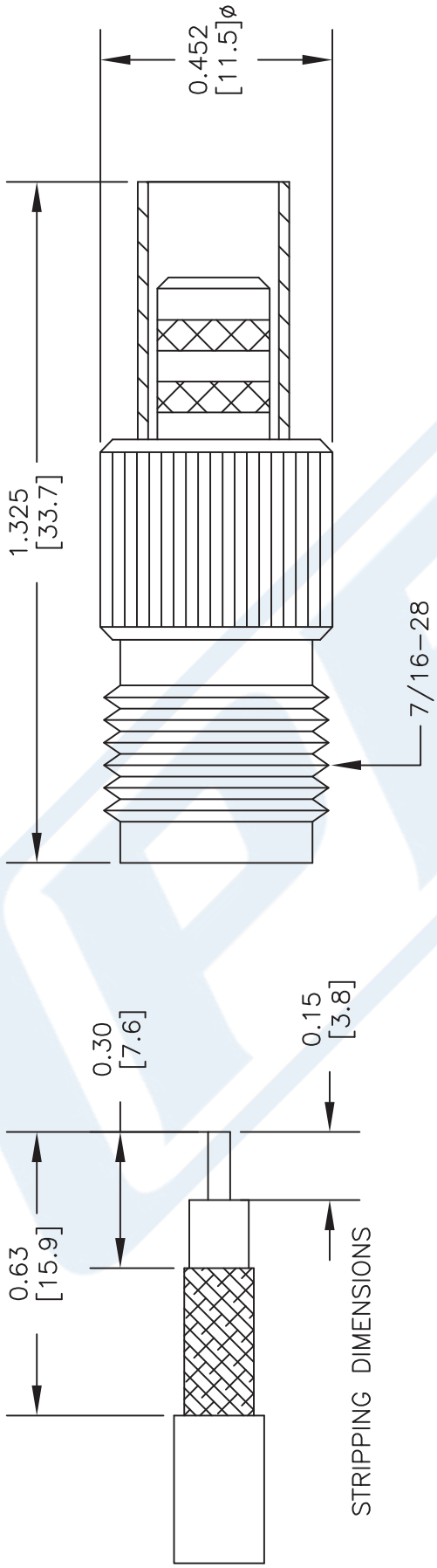

CRIMP SIZE REQUIRED

CONTACT: .068" HEX CRIMP TOOL
FERRULE: .255" HEX CRIMP TOOL

NOTES:
1. UNLESS OTHERWISE SPECIFIED ALL DIMENSIONS ARE NOMINAL.
2. ALL SPECIFICATIONS ARE SUBJECT TO CHANGE WITHOUT NOTICE AT ANY TIME.
3. DIMENSIONS ARE IN INCHES [mm].
4. FITS MIL-C-17 AND EQUIVALENT CABLES.

DWG TITLE
PE44636

FSCM NO. 53919

CAD FILE 050609-A | SCALE N/A | SIZE A | XXXX

PASTERNACK®
THE ENGINEER'S RF SOURCE
Pasternack Enterprises, Inc.
P.O. Box 16759 | Irvine | CA | 92623
Phone: (949) 261-1920 | **Fax:** (949) 261-7451
Website: www.pasternack.com | **E-Mail:** sales@pasternack.com

© 2016 Pasternack Enterprises All Rights Reserved

LMR-240-FR Fire Rated version of the 240 series Low Loss Coax

RF Cables
Technical Data Sheet

LMR-240-FR

Times Microwave Systems Coax Cable Specification

Configuration

- Low Loss, Outdoor Flexible Cable
- 2 Shield(s)

Features

- CMR Riser Rated Coax
- Non-Halogen, Low Smoke FRPE Jacket
- Max Operating Frequency of 5.8 GHz
- Phase Velocity 83% VoP
- Max Operating Temperature +85°C
- Min Install Bend Radius of 0.75 inches

Applications

- In-Building Riser Runs
- Short Antenna Installs
- RF Test Systems
- General Purpose RF Interconnect
- Laboratory Applications

Description

LMR-240-FR Fire Rated version of the 240 series Low Loss Coax from Times Microwave is part of the large product offering by Pasternack of radio frequency coaxial cable types specifically stocked to be ready for same-day shipment. Pasternack LMR-240-FR coax cable is manufactured in a flexible design and has a 50 Ohm impedance. This low loss and CMR riser rated 50 Ohm coax cable LMR-240-FR is constructed with a 0.240 inch diameter and Black FRPE jacket.

LMR-240-FR flexible 50 Ohm coax cable with FRPE jacket is rated for a 5.8 GHz maximum operating frequency. This 50 Ohm 0.240 inch diameter and low loss fire rated coax cable is built with an aluminum double shield count and RF shielding of 90 dB. Times Microwave LMR-240-FR FRPE coax is constructed with Foam PE dielectric and a maximum operating temperature of 85 degrees C. Pasternack's offering of LMR-240-FR coax cable provides specs for this wire on its RF coax cable LMR-240-FR datasheet.

LMR-240-FR cable is part of more than one million RF, microwave parts in stock at Pasternack. This Times Microwave low loss flexible LMR-240-FR coax cable is ready to buy and can be shipped worldwide. Pasternack also maintains a wide selection of other radio frequency coaxial cable types that ship same-day from our warehouse as with the rest of our other RF/microwave components.

* LMR™ is a trademark of Times Microwave Systems.

Electrical Specifications

Description	Minimum	Typical	Maximum	Units
Frequency Range	DC		5.8	GHz
Impedance		50		Ohms
Velocity of Propagation		83		%
Time Delay		1.21 3.97		ns/ft ns/m
Shielding Effectiveness	90			dB
Dielectric Withstanding Voltage (DC)			1,500	Vdc

Click the following link (or enter part number in "SEARCH" on website) to obtain additional part information including price, inventory and certifications: LMR-240-FR Fire Rated version of the 240 series Low Loss Coax LMR-240-FR

Pasternack Enterprises, Inc. • P.O. Box 16759, Irvine, CA 92623
Phone: (866) 727-8376 or (949) 261-1920 • **Fax:** (949) 261-7451
Sales@Pasternack.com • Techsupport@Pasternack.com

© 2020 Pasternack Enterprises All Rights Reserved

LMR-240-FR Fire Rated version of the 240 series Low Loss Coax

Jacket Spark		5,000	Vrms
Inner Conductor DC Resistance		3.2	Ohms/1000ft
Outer Conductor DC Resistance		3.89	Ohms/1000ft
Nominal Capacitance	24.2 [79.4]		pF/ft [pF/m]
Nominal Inductance	0.06 [0.2]		uH/ft [uH/m]
Input Power (Peak)		5.6	kWatts

Performance by Frequency Band

Description	F1	F2	F3	F4	F5	Units
Frequency	50	150	220	450	900	MHz
Attenuation, Typ	1.7	3	3.7	5.3	7.6	dB/100ft
	5.58	9.84	12.14	17.39	24.93	dB/100m
Input Power (CW), Max	1,150	660	540	380	260	Watts

Description	F6	F7	F8	F9	F10	Units
Frequency	1.5	1.8	2	2.5	5.8	GHz
Attenuation, Typ	9.9	10.9	11.5	12.9	20.4	dB/100ft
	32.48	35.76	37.73	42.32	66.93	dB/100m
Input Power (CW), Max	200	180	170	150	100	Watts

Mechanical Specifications

Diameter	0.24 in 6.1 mm
Min. Bend Radius (Installation)	0.75 in [19.05 mm]
Min. Bend Radius (Repeated)	2.5 in [63.5 mm]
Bending Moment	0.25 lbs-ft [0.34 N-m]
Tensile Strength	80 lbs [36.29 kg
Flat Plate Crush	20 lbs/in [0.36 Kg/mm]

Construction Specifications

Description	Material and Plating	Diameter
Inner Conductor	Copper, 1 Strand	0.056 in [1.42 mm]
Conductor Type	Solid	

Click the following link (or enter part number in “SEARCH” on website) to obtain additional part information including price, inventory and certifications: LMR-240-FR Fire Rated version of the 240 series Low Loss Coax LMR-240-FR

Pasternack Enterprises, Inc. • P.O. Box 16759, Irvine, CA 92623
Phone: (866) 727-8376 or (949) 261-1920 • **Fax:** (949) 261-7451
Sales@Pasternack.com • Techsupport@Pasternack.com

© 2020 Pasternack Enterprises All Rights Reserved

LMR-240-FR Fire Rated version of the 240 series Low Loss Coax

Dielectric	Foam PE	0.15 in [3.81 mm]
First Shield	Aluminum Tape	[ ]
Second Shield	Tinned Copper	[ ]
Jacket	FRPE, Black	0.24 in [6.1 mm]

Environmental Specifications

Temperature

Operating Range	-40 to +85 deg C
Installation Range	-40 to +85 deg C
Storage Range	-70 to +85 deg C

Compliance Certifications (see product page for current document)

Plotted and Other Data

Notes:

LMR-240-FR Fire Rated version of the 240 series Low Loss Coax from Pasternack Enterprises has same day shipment for domestic and International orders. Our RF, microwave and millimeter wave products maintain a 99.4% availability and are part of the broadest selection in the industry.

Click the following link (or enter part number in “SEARCH” on website) to obtain additional part information including price, inventory and certifications: LMR-240-FR Fire Rated version of the 240 series Low Loss Coax LMR-240-FR

URL: https://www.pasternack.com/low-loss-flexible-lmr-240-fr-frpe-jacket-aluminum-tape-over-tinned-copper-outer-conductor-double-shielded-lmr-240-fr-p.aspx

The information contained in this document is accurate to the best of our knowledge and representative of the part described herein. It may be necessary to make modifications to the part and/or the documentation of the part, in order to implement improvements. Pasternack reserves the right to make such changes as required. Unless otherwise stated, all specifications are nominal. Pasternack does not make any representation or warranty regarding the suitability of the part described herein for any particular purpose, and Pasternack does not assume any liability arising out of the use of any part or documentation.

Pasternack Enterprises, Inc. • P.O. Box 16759, Irvine, CA 92623
Phone: (866) 727-8376 or (949) 261-1920 • **Fax:** (949) 261-7451
Sales@Pasternack.com • Techsupport@Pasternack.com

© 2020 Pasternack Enterprises All Rights Reserved

LMR-240-FR CAD Drawing

LMR-240-FR Fire Rated version of the 240 series Low Loss Coax

REVISIONS

REV.	DESCRIPTION	DATE	APPROVED
A	INITIAL RELEASE	06-04-2021	SELLIS

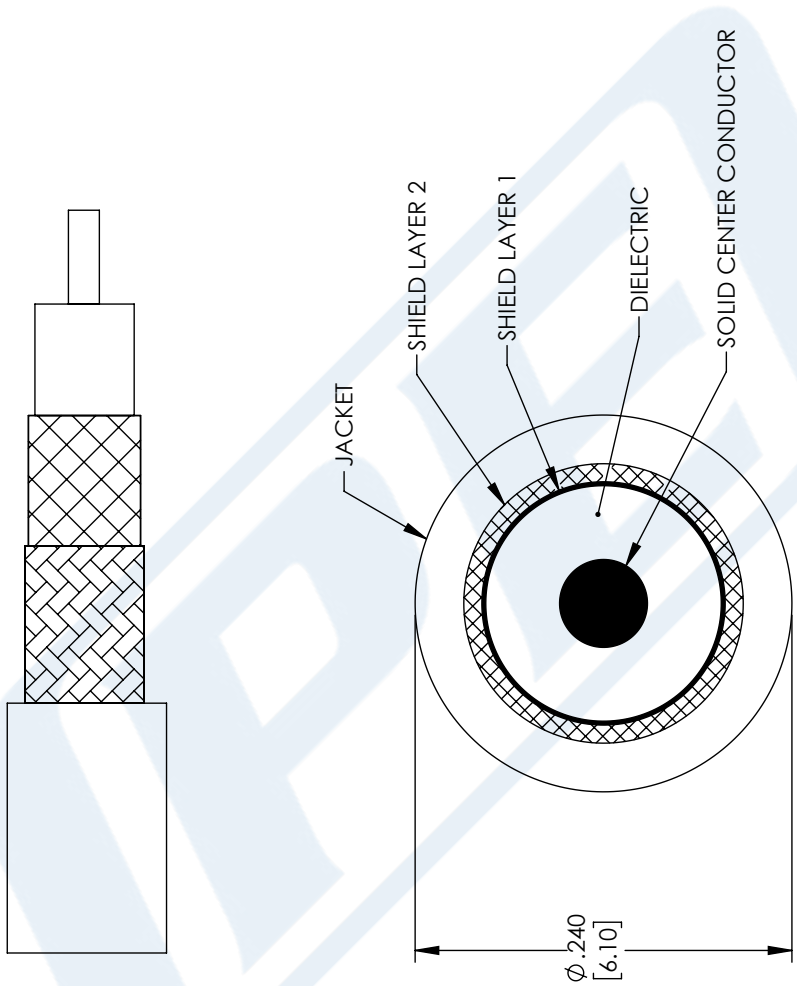

UNLESS OTHERWISE SPECIFIED
LEADING DIMENSIONS ARE INCHES
DIMENSIONS IN [ ] ARE MILLIMETERS

TOLERANCES:

.X = ± .2 [5.08] | FRACTIONS
.XX = ± .02 [.51] | ± 1/32
.XXX = ± .005 [.13] | ANGLES ± 1°

CABLE LENGTH (L) TOLERANCES:

L ≤ 12 [305] = +1 [25] / -0
12 [305] < L ≤ 60 [1524] = +2 [51] / -0
60 [1524] < L ≤ 120 [3048] = +4 [102] / -0
120 [3048] < L ≤ 300 [7620] = +6 [152] / -0
300 [7620] < L = +5%L / -0

ALL DIMENSIONS SHOWN ARE FOR REFERENCE ONLY.

PASTERNACK an INFINITE brand

Pasternack Enterprises, Inc.
P.O.Box 16759, Irvine, CA 92623.
Phone: 1.949.261.1920 | 1.866.727.8376
Fax: 1.949.261.7451
Website: www.pasternack.com
E-mail: sales@pasternack.com

THIRD-ANGLE PROJECTION

THE INFORMATION AND DESIGN IN THIS DOCUMENT IS THE PROPERTY OF PASTERNACK CORPORATION ALL RIGHTS RESERVED.

SHEET 1 OF 1
SCALE N/A

SIZE	CAGE CODE	DRAWN BY	ITEM NO.	REV
A	53919	MVEERAPPAN	LMR-240-FR	A

THESE COMMODITIES, TECHNOLOGY OR SOFTWARE WERE EXPORTED FROM THE UNITED STATES IN ACCORDANCE WITH THE EXPORT ADMINISTRATION REGULATIONS. DIVERSION CONTRARY TO U.S. LAW PROHIBITED.

T-Rev.D